WARNING — RISK OF ELECTRIC SHOCK AND FIRE

Unplug the power cord, or disconnect power at the circuit breaker, before installing, linking, cleaning or servicing this fixture.

Before installation, consult your local ordinances and building codes for compliance. LAMAR LED assumes no responsibility for misapplication of fixtures.

For indoor use only. The IFLED is IP20 rated and is not protected against water — do not install it where it can be splashed, sprayed or exposed to condensation.

Do not exceed 120W of fixtures on one linked run. Do not install a damaged fixture, cord or connector, and do not modify the body, lens, cord, connectors or factory wiring — doing so voids the ETL listing.

1. Before You Begin

The IFLED is a slim, linkable T5 integrated LED strip fixture for indoor display, task and accent lighting. It surface mounts in mounting clips and links end-to-end or by linking cord into continuous runs. The catalog number on the fixture label is the authority for what was supplied.

- Match the catalog number. Compare the label to the approved submittal — wattage / nominal length and CRI / CCT (for example IFLED16-4-840).
- Check the supply. The fixture is rated 120–277V universal input, non-dimming. The included 60 in. power cord has a 2-prong US plug for a standard 120V receptacle. Consult the factory before connecting the fixture any other way.
- Do not connect the IFLED to a dimmer. It is non-dimming; use a standard switch, the switched receptacle, or the fixture's own on/off rocker switch.
- Check the contents (Figure 1). Each fixture ships with (2) mounting clips with hardware, (1) 9.5 in. linkable connector and (1) 60 in. 2-prong US power cord.
- Inspect the shipment. Check the white plastic body, frosted lens, end caps, cord and connectors for damage before installing.
- Tools required. Drill / driver with suitable bits, tape measure, pencil, level, and anchors suited to the mounting surface where the supplied hardware is not appropriate.



Figure 1 — Included accessories.

Catalog number	Nominal length, A body / B complete, power, lumens
IFLED7-2-8xx	2′ — A 21.37 in. / B 21.87 in. — 7W — 645 lm
IFLED12-3-8xx	3′ — A 34.37 in. / B 34.87 in. — 12W — 1,100 lm
IFLED16-4-8xx	4′ — A 46.18 in. / B 46.68 in. — 16W — 1,450 lm

8xx denotes CRI / CCT: 830 (3000K), 835 (3500K), 840 (4000K), 850 (5000K), 865 (6500K); CRI >80 for all. Power factor >0.9. End cap profile 1.18 in. high x 0.87 in. wide (Figure 4).

2. Plan the Run

Fixtures can be linked end-to-end by direct connection, or spaced apart and joined with the 9.5 in. linkable connector. The total of all fixtures on one run, fed from one power cord, must not exceed 120W.

Fixture size	Maximum fixtures on one run (120W limit)
2′ — IFLED7-2 (7W)	17 fixtures (119W)
3′ — IFLED12-3 (12W)	10 fixtures (120W)
4′ — IFLED16-4 (16W)	7 fixtures (112W)
Mixed sizes	Add the wattage of every fixture on the run; keep the total at or below 120W

1. Lay out the run on the mounting surface. Mark the fixture ends and confirm the run is straight and level.
2. Locate the power cord at the end of the run nearest the receptacle, and confirm the 60 in. cord reaches it without strain, splicing or an extension cord.
3. Keep the cord and linking connectors clear of sharp edges, hinges, door and drawer paths, and heat sources.

2A. Overall system length

- Single fixture: add the power cord rigid length (1.62 in.) to dimension B.
- Multiple fixtures linked end-to-end: add the power cord rigid length (1.62 in.) to dimension A for every fixture except the last, plus dimension B for the last fixture.
- Where linking cords are used, add the space taken by each linking cord between fixtures. The linking plug rigid length is 2.31 in.

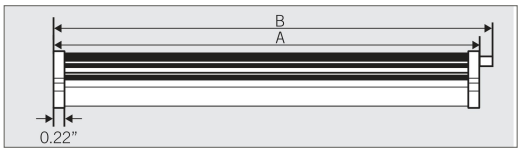

Figure 2a — Fixture dimensions A and B; 0.22 in. end cap.

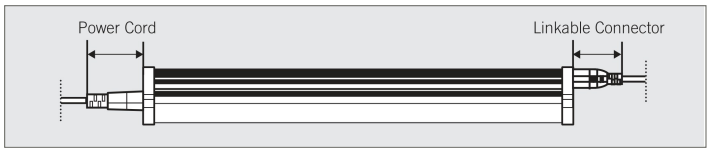

Figure 2b — Power cord and linkable connector rigid lengths.

3. Mount the Fixture

Surface mount using the two mounting clips supplied with each fixture (Figure 3).

1. Hold the fixture in position and mark the two clip locations, one near each end of the body, so both clips land on the body and clear the end caps.
2. Fasten each clip to the surface with the supplied screws. In drywall or other soft material, use the supplied anchors; in other materials use fasteners suited to the substrate.
3. Align the fixture with the clips and press it straight in until the body snaps fully into both clips.
4. Confirm the fixture is held securely, sits straight and does not rock.
5. Repeat for each fixture in the run, keeping the ends aligned for linking.

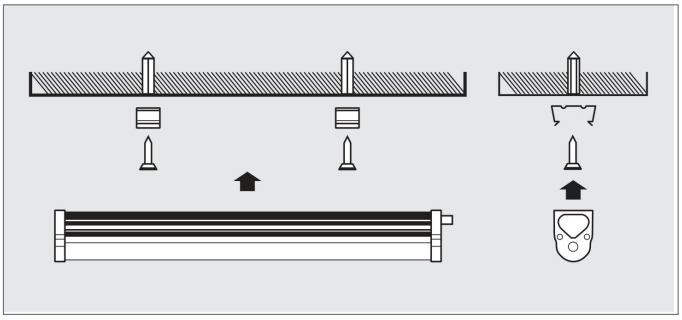
Figure 3 — Install the mounting clips, then insert the fixture into the clips.

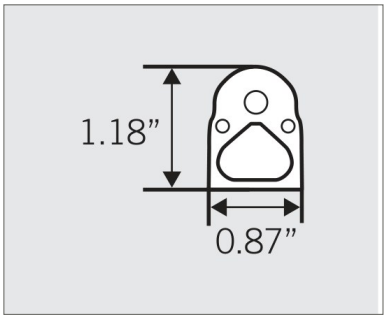

Figure 4 — End cap profile.

4. Connect and Link

1. Confirm the power cord is unplugged.
2. End-to-end runs: push the end of each fixture fully into the next one so the direct connection is seated, with no gap between end caps.
3. Spaced runs: plug the 9.5 in. linkable connector fully into the end of one fixture and the facing end of the next. Use only the linkable connector supplied with the IFLED.
4. Plug the power cord's fixture connector fully into the open end of the first fixture in the run.
5. Dress the power cord and linking connectors so they are not pinched, stretched or kinked; secure loose cord along the surface without stapling through it.
6. Plug the power cord into the receptacle last.

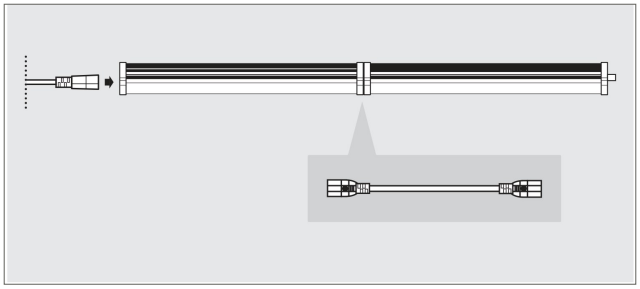
Figure 5 — Connect the power cord and linkable connectors as needed.

5. Start-Up Check and Maintenance

- Turn on the circuit and switch each fixture on with its integrated on/off rocker switch. Confirm every fixture on the run lights.
- If a fixture does not light, unplug the run, re-seat its direct or linking connection, and check its rocker switch.
- Confirm all fixtures in the space show the same CCT, as ordered.
- No relamping is required — the LEDs are integrated, with a 50,000 hour rated lifetime. Replace a failed fixture as a unit; do not open the body.
- To clean, unplug the run and wipe the lens with a soft, dry or slightly damp cloth. Do not use solvents, ammonia or abrasive cleaners.
- Listings and ratings as published: ETL Listed. IP20 construction. 50,000 hour rated lifetime.

QUESTIONS OR APPLICATIONS NOT COVERED HERE

Consult the factory for additional options not shown or listed. Contact LAMAR LED at 631.777.7700 or visit www.lamarled.com. Due to the rapid advancements in LED technology, please consult our website for the most current technical data.