Installation Instructions for cleanLED fixture models:

CLF22-S1-C-UV-HAL-LFSS304-CTG-NB

CLF24-VH1-C-UV-HAL-LFSS304-CTG-NB

CAUTION! ELECTRICAL SHOCK HAZARD. ALL WORK MUST BE PERFORMED BY A LICESED ELECTRICIAN OR QUALIFIED MAINTENANCE PERSONNEL. TURN OFF POWER TO ELECTRICAL CIRCUITS BEFORE ATTEMPTING TO INSTALL THE FIXTURE. ENSURE THAT THE ELECTRICIAN IS WEARING ALL RELEVANT SAFETY EQUIPMENT.

Revised 4/1/16

Step 1: Unpack the unit

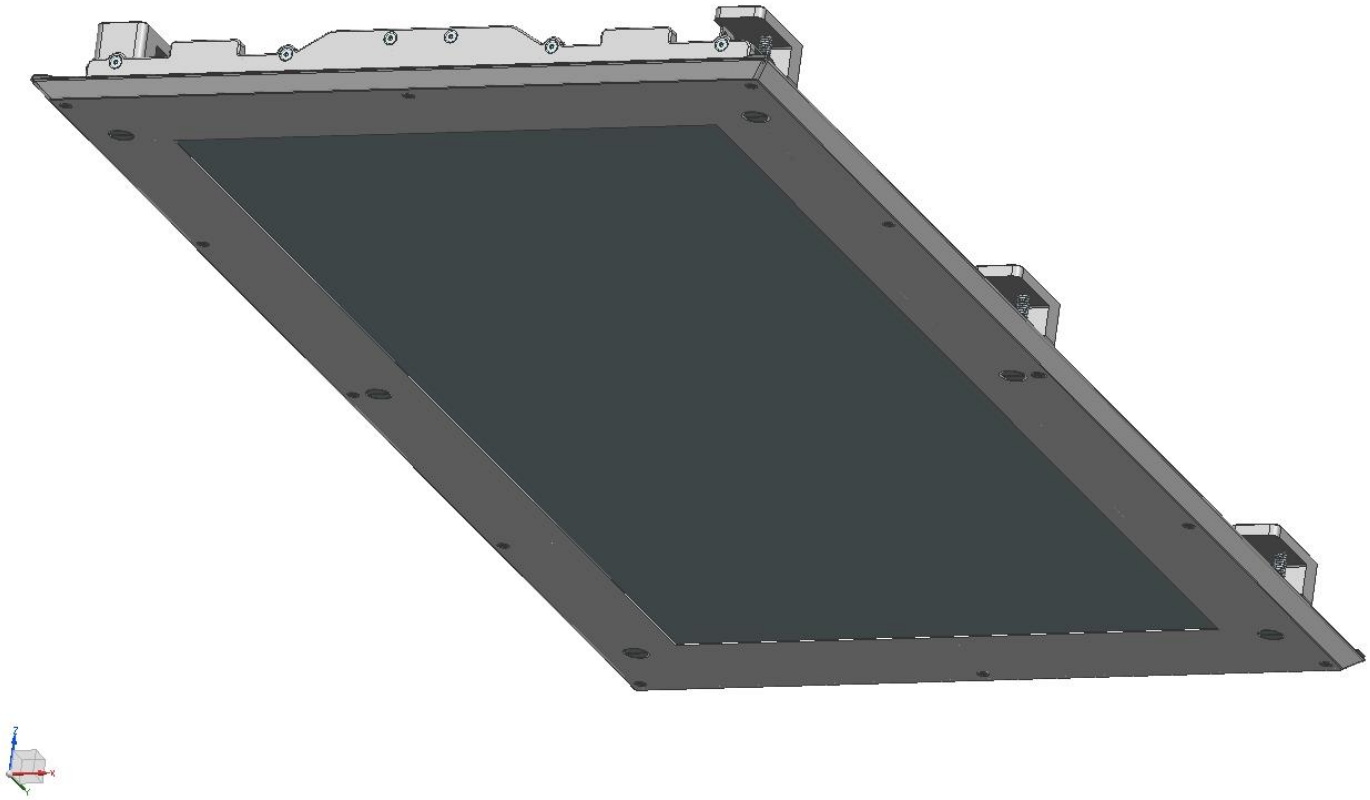

Step 2: Remove clamp screws to access clamps

- (6 for 2x4 &1x4 and 4 for 2x2 units)
- Use a large flat head screwdriver
- Recommended models include Wera 110105 and PB Tools 135.7-40 (size 7)

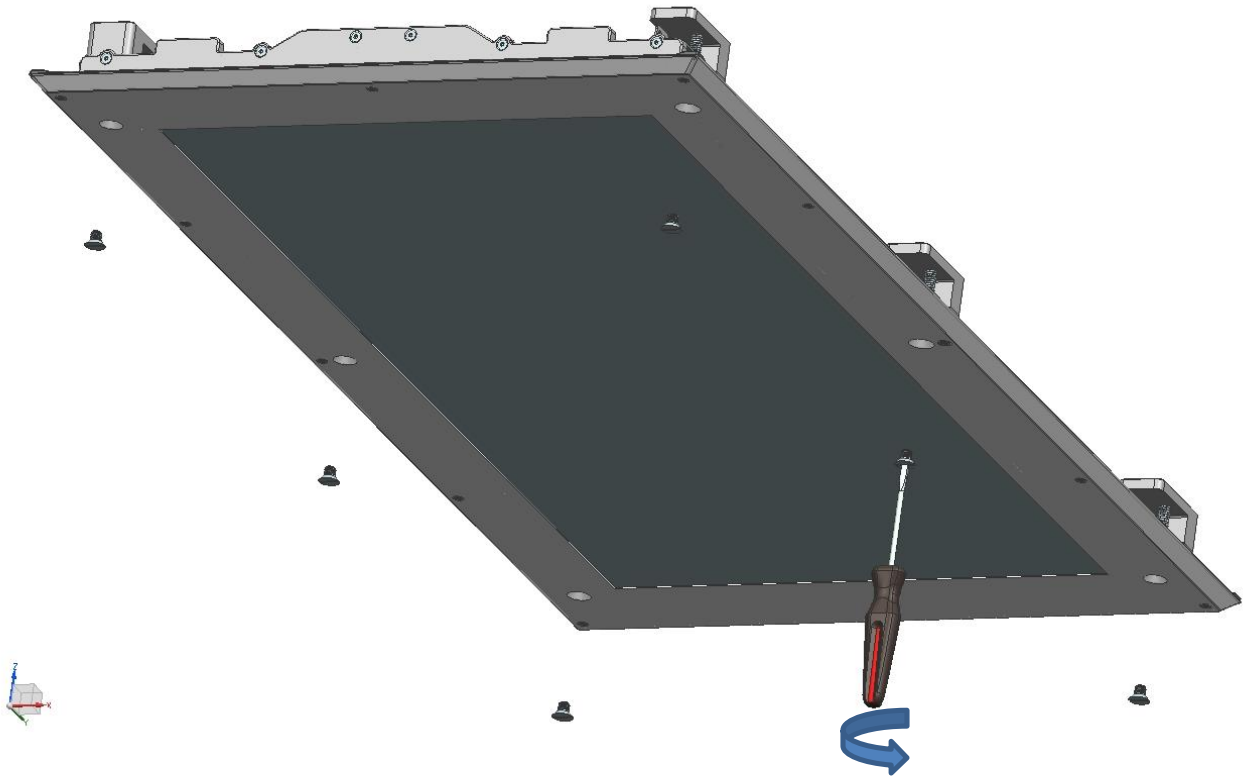

Step 3: Insert the unit in the ceiling cutout

- Make sure to snake in the cable through the aperture
- Ensure the gasket is uniformly seated around the fixture

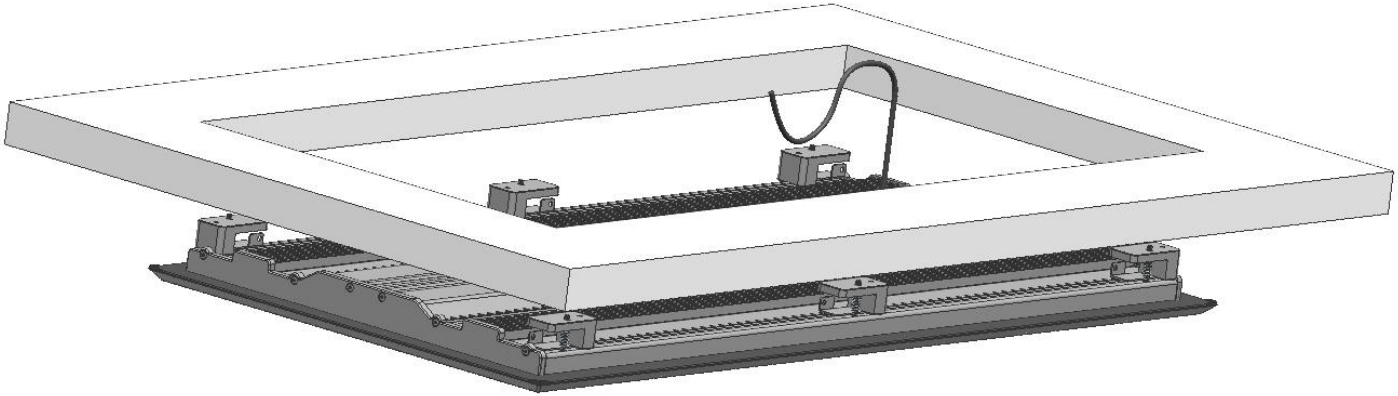

Step 4: Use 3/16” Hex Key to lock the unit in the ceiling

- Slowly tighten each clamp until the clamp “clicks” when it is located at 90 degrees to the edge of the ceiling.
- Continue to tighten to a minimum of 120 inch-pounds
- Inspect the gasket fit to the ceiling to ensure there are no snags or bulges

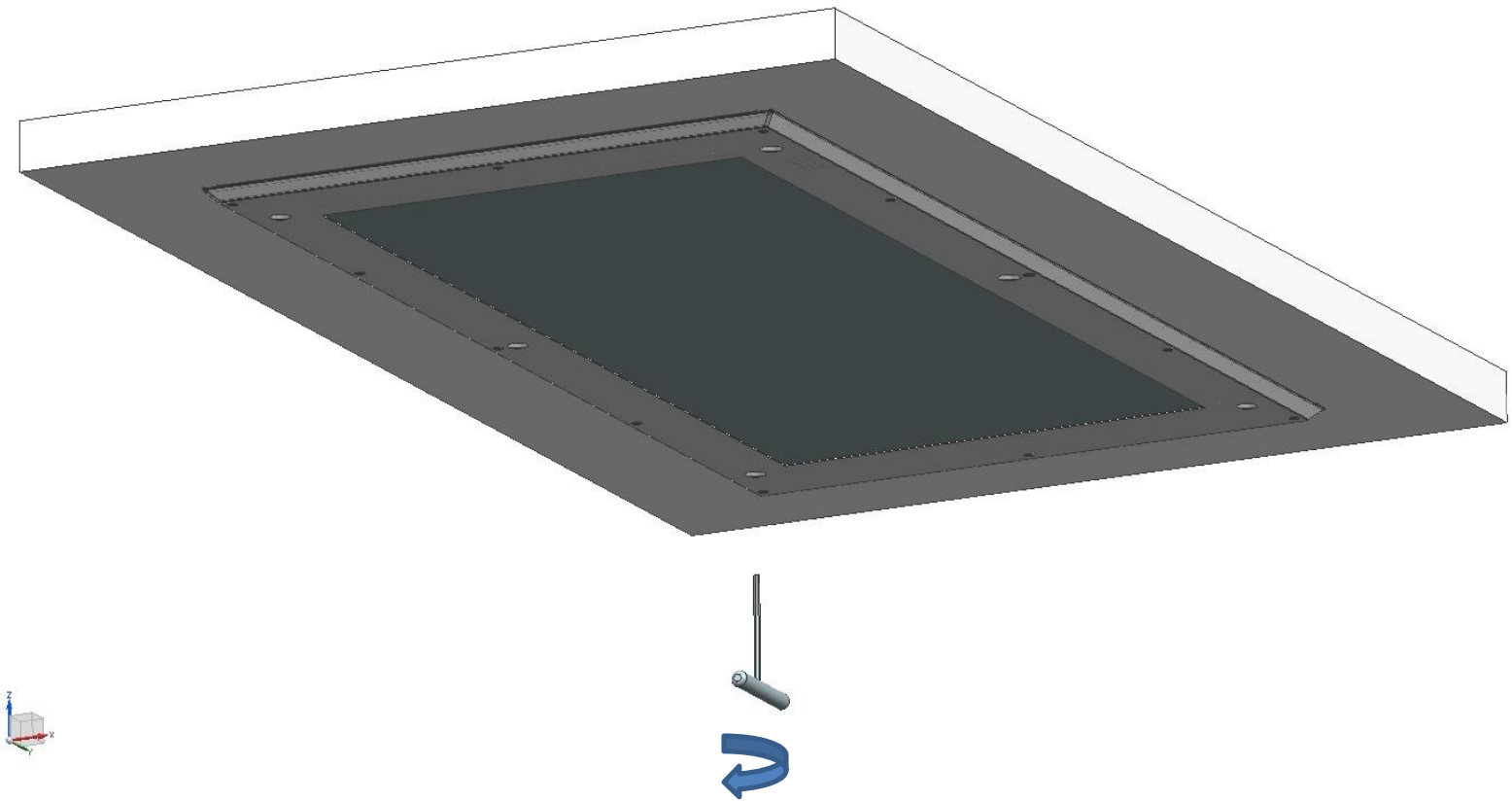

Step 5: Make sure that the unit is locked fully in place

- Inspect the orientation of each of the clamps to ensure that they are perpendicular to the edge of the cutout
- If a clamp is out of alignment, loosen the clamp until the clamp is free to rotate then rotate the clamp until it is perpendicular. Then re-tighten

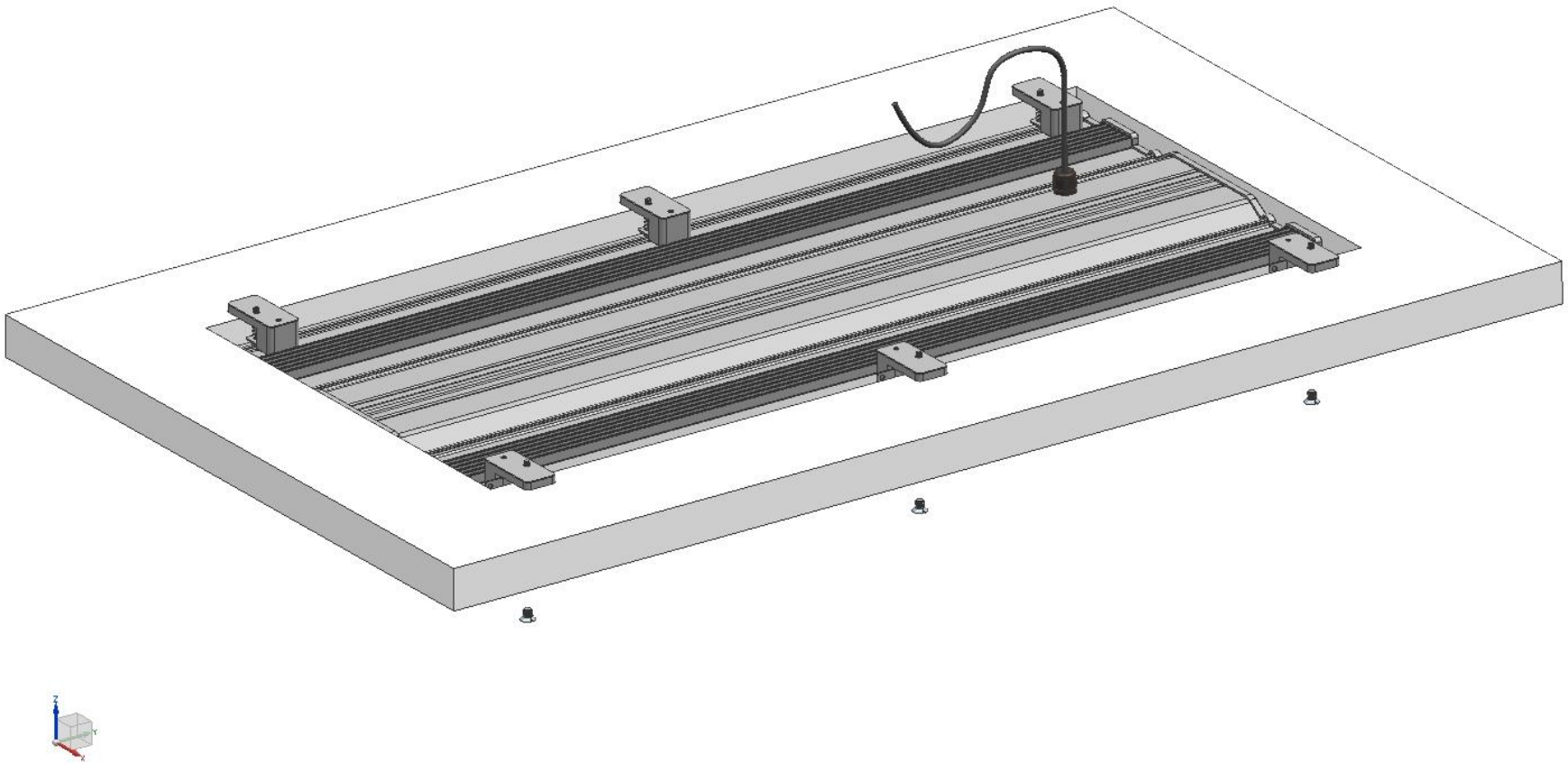

Step 6: Replace clamp screws

- Replace the clamp screws using the same tool that was used to remove them
- Tighten to min 30 inch-pounds

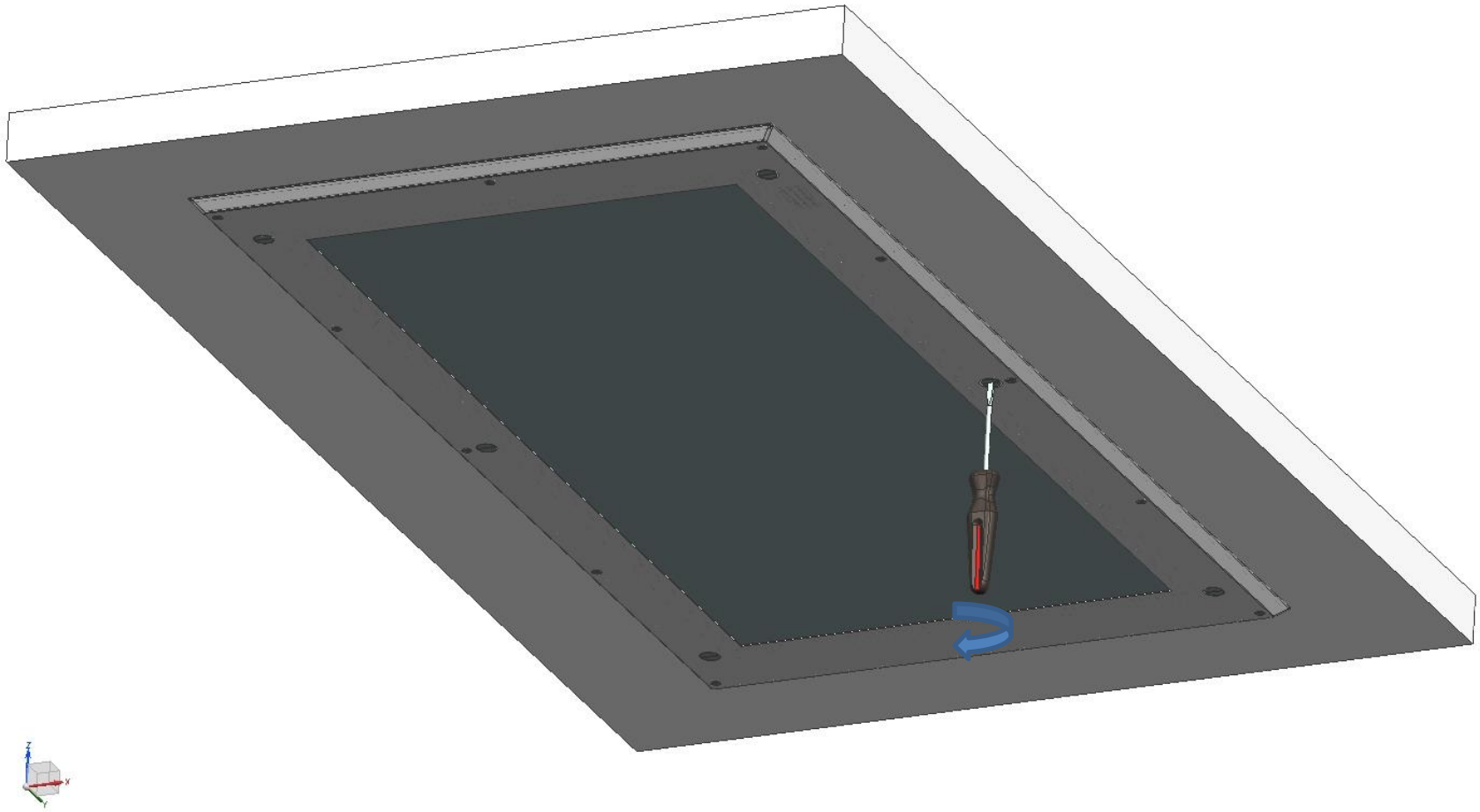

V in = 120-277VAC 50/60Hz
Total whip length = 10 feet
Conductor gauge = 18
Whip has 6 conductors

Black = AC Line
White = AC Neutral
Green = Ground
Red = Dim + (Cap off with a UL recognized or listed non-conductive part if not using dimming)
Blue = Dim – (Cap off with a UL recognized or listed non-conductive part if not using dimming)
Brown = Not used in current iteration
*With regards to dimming connect the Red wire to a 0-10V dimmer positive wire and the Blue wire to the 0-10V return wire. The Output vs dimming voltage operates as function of the below table.

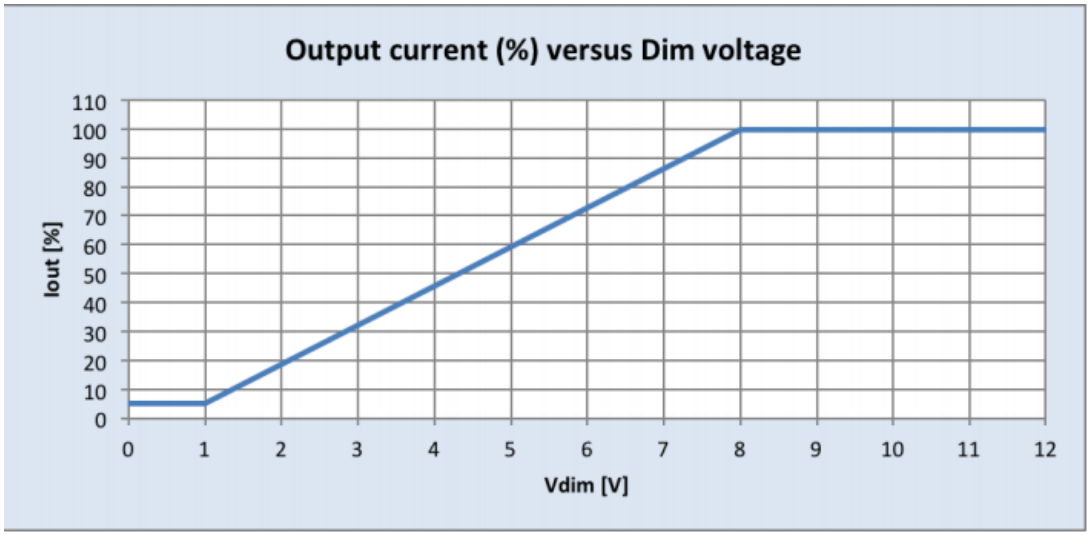

The maximum output voltage that can be applied to the dimming wires is 12VDC.
Some approved dimmers include:
The Lutron Mark VII approved series (http://www.lutron.com/en-US/general/Pages/Advance/AdvanceBallast.aspx)
Leviton IllumaTech IP7 series
Philips Sunrise – SR120OZTUNV